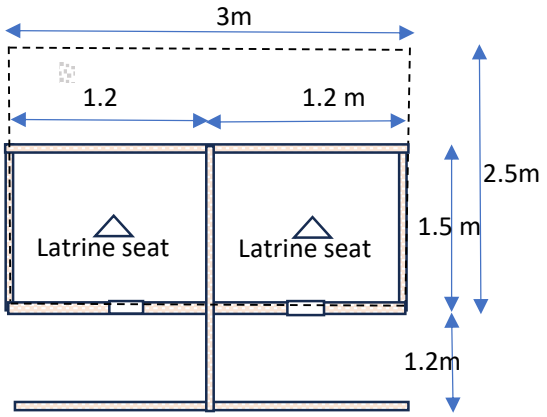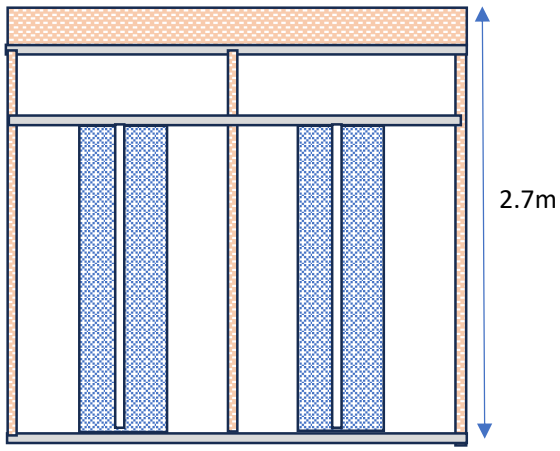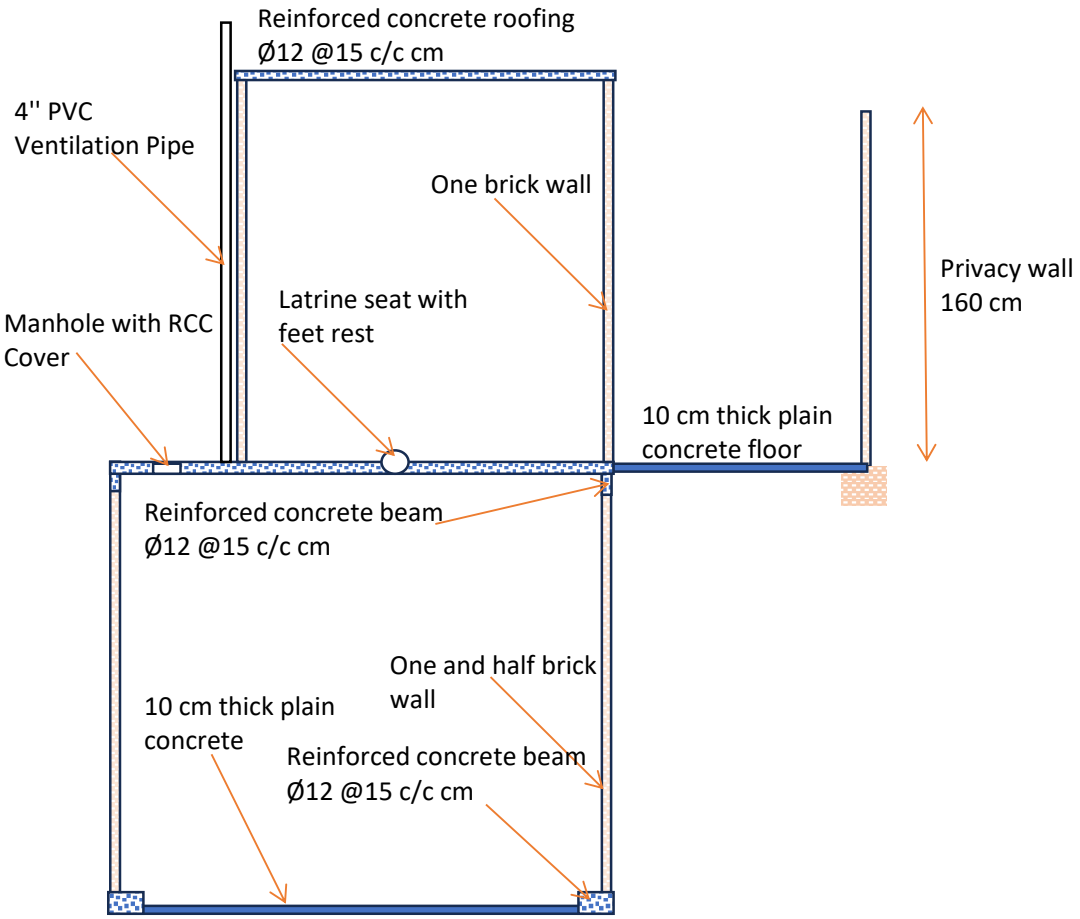Sketch Drawing for latrines one block with two doors